THE INFORMATION CONTAINED IN THIS DRAWING IS THE SOLE PROPERTY OF L-COM, INC. ANY REPRODUCTION IN PART OR WHOLE WITHOUT THE WRITTEN PERMISSION OF L-COM, INC. IS PROHIBITED.

REVISIONS

REV	DESCRIPTION	DATE	APPROVED
A	INITIAL RELEASE	9/12/17	D.FRISIELLO

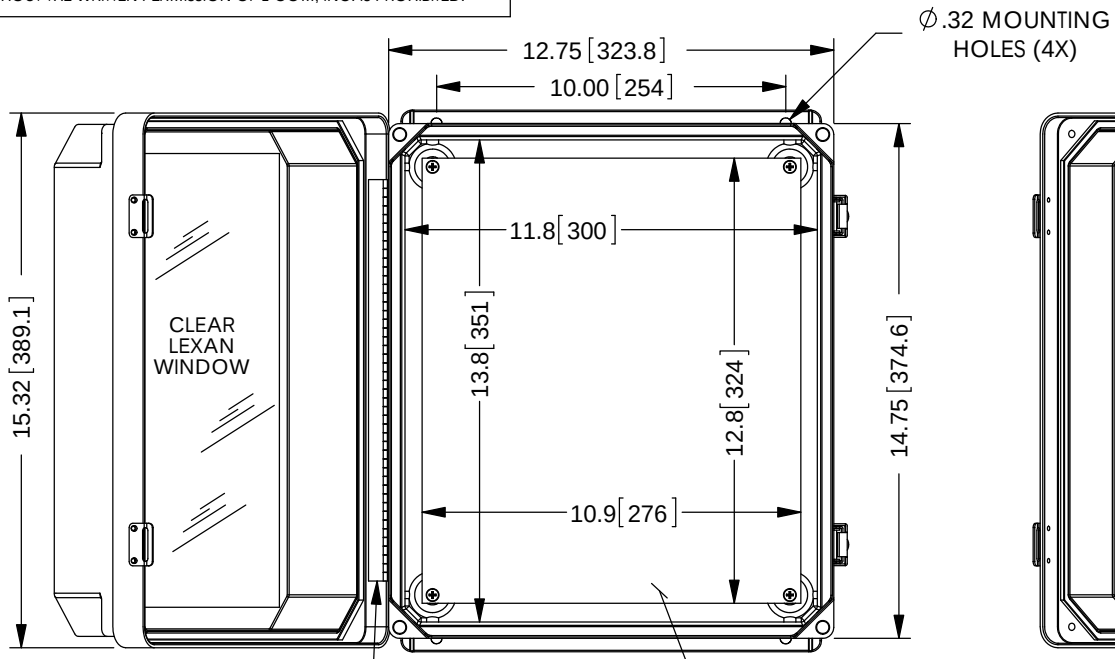

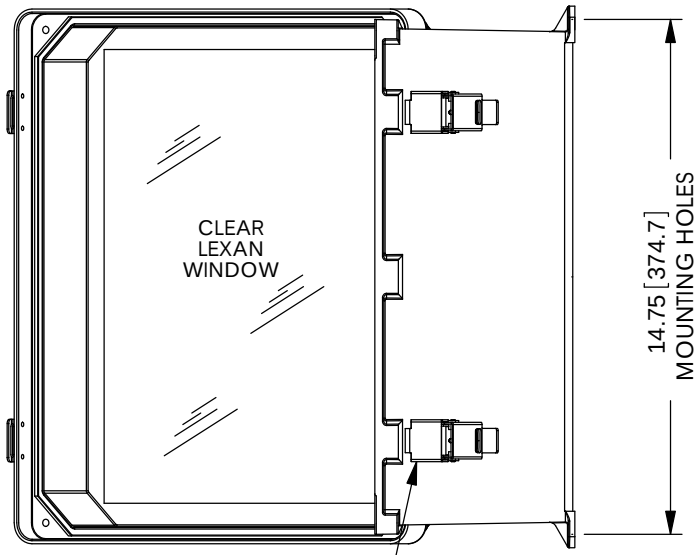

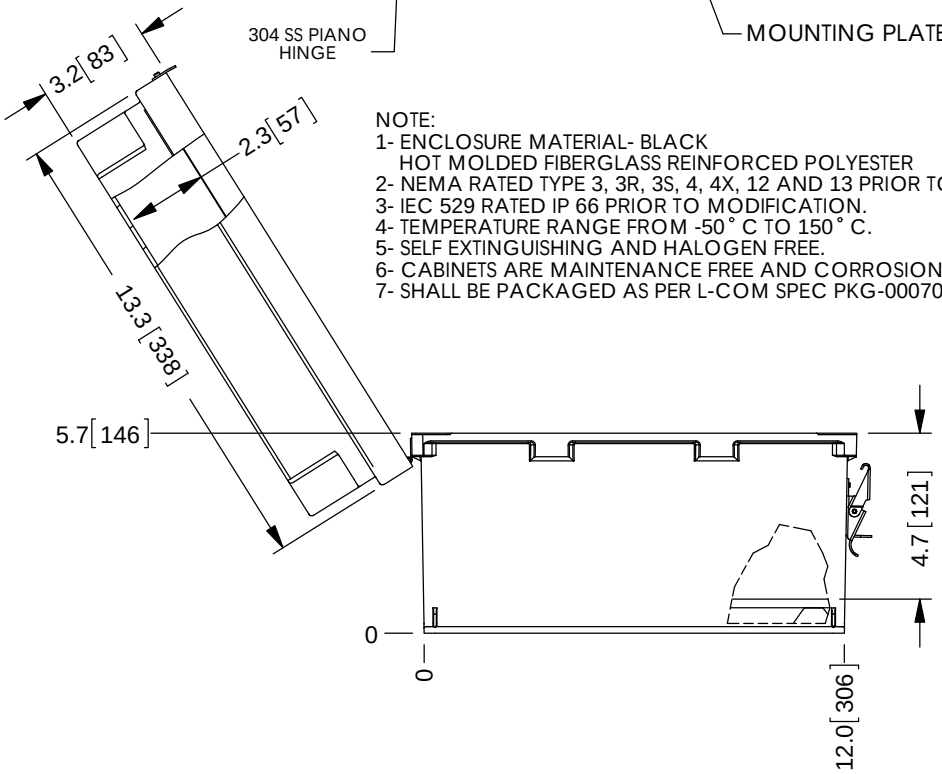

NOTE:
1- ENCLOSURE MATERIAL- BLACK
HOT MOLDED FIBERGLASS REINFORCED POLYESTER
2- NEMA RATED TYPE 3, 3R, 3S, 4, 4X, 12 AND 13 PRIOR TO MODIFICATIONS.
3- IEC 529 RATED IP 66 PRIOR TO MODIFICATION.
4- TEMPERATURE RANGE FROM -50° C TO 150° C.
5- SELF EXTINGUISHING AND HALOGEN FREE.
6- CABINETS ARE MAINTENANCE FREE AND CORROSION RESISTANT.
7- SHALL BE PACKAGED AS PER L-COM SPEC PKG-00070

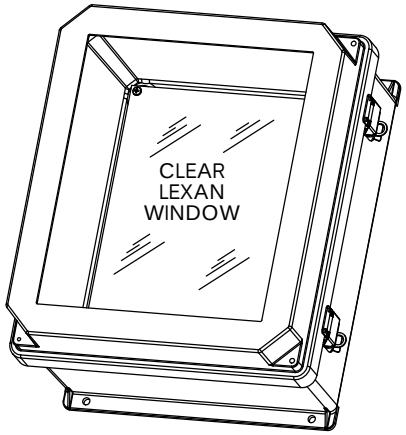

REGULATORY COMPLIANCE:
CE2011/65/EU(RoHS DIRECTIVE)

UNLESS OTHERWISE SPECIFIED,
DIMENSIONS ARE IN INCHES [mm]
DIMENSIONAL TOLERANCES:
.X = ±.1 [2.54]
.XX = ±.01 [.25]
.XXX = ±.005 [.13]
ANGULAR TOLERANCES:
ALL = ± 1°
PROJECTION

APPROVALS	DATE
DRAWN BY D.FRISIELLO	9/12/17
CHECKED BY D.GUTTADAURO	9/12/17
APPROVED BY M.MARTINEZ	9/12/17

CONFIGURATION DETAILS OF UNDIMENSIONED FEATURES MAY VARY

COLOR VARIATIONS MAY OCCUR

L-COM Global Connectivity
50 HIGH STREET
NORTH ANDOVER, MA
01845

CATEGORY
ENCLOSURES

PRODUCT DESCRIPTION
FRP 14x12x7"BLK WNDW N-MTL PLT

SIZE	FSCM NO.	DWG. NO.	REV.
A	43321	NBBW141207-KIT01	A

SCALE: NONE | CAD FILE: NBBW141207-KIT01.SLDDRW | SHEET 1 OF 1